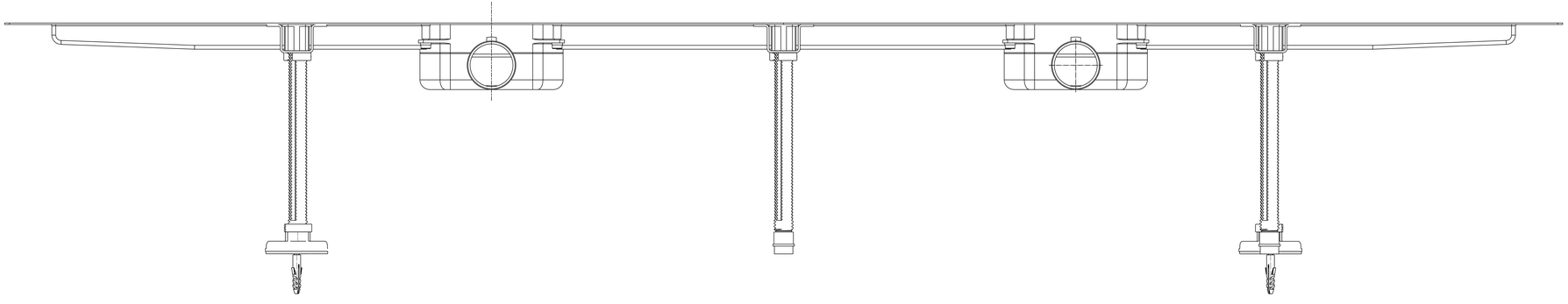

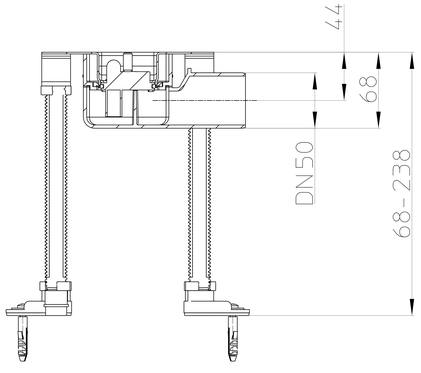
44
68
DN50
68-238

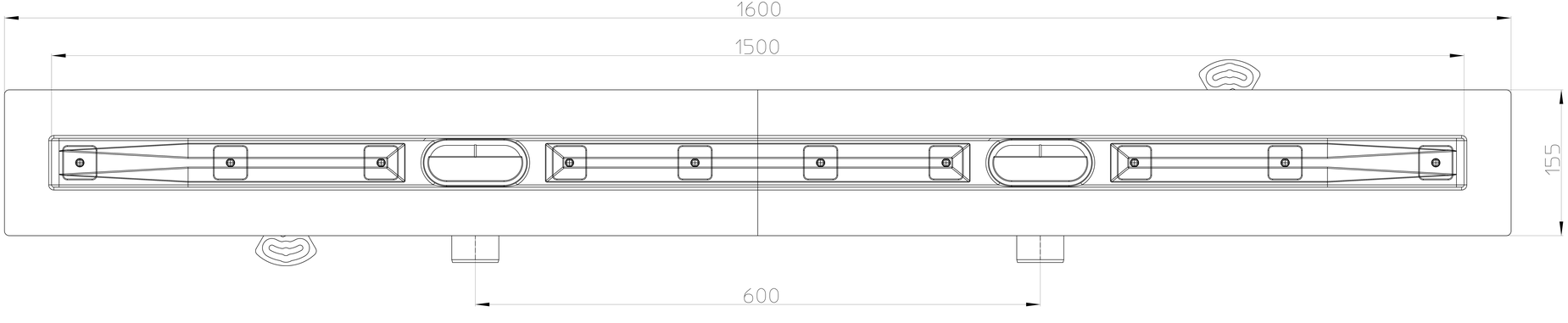
1600
1500
155
600